DocuSign Envelope ID: 9BD94A99-60F7-4913-80C1-A226F8D7B294

8/17/99

| PROJECT REFERENCE NO. | SHEET NO. |
|---|---|
| B-6020 | 2B-1 |
| POLK COUNTY | CULVERT #740144 |

Plans Prepared By:

AMERICAN Engineering
8008 CORPORATE CENTER DRIVE, SUITE 110
CHARLOTTE, NORTH CAROLINA 28226
NC Lic. No. C-3881

STATE OF NORTH CAROLINA
DEPT. OF TRANSPORTATION
DIVISION OF HIGHWAYS
RALEIGH, N.C.

SPECIAL DETAIL FOR
**GUARDRAIL PLACEMENT**
25'-0" CLEAR SPAN

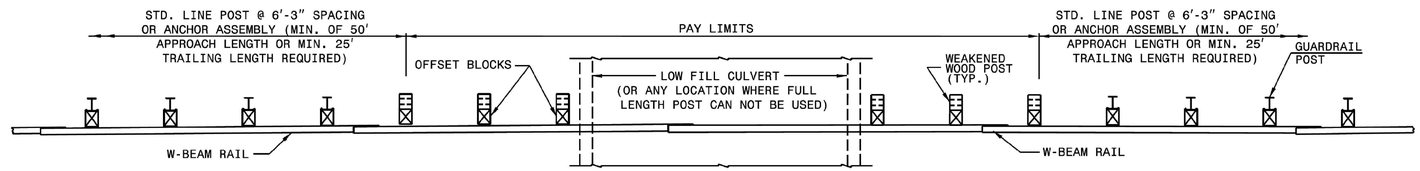


**PLAN**

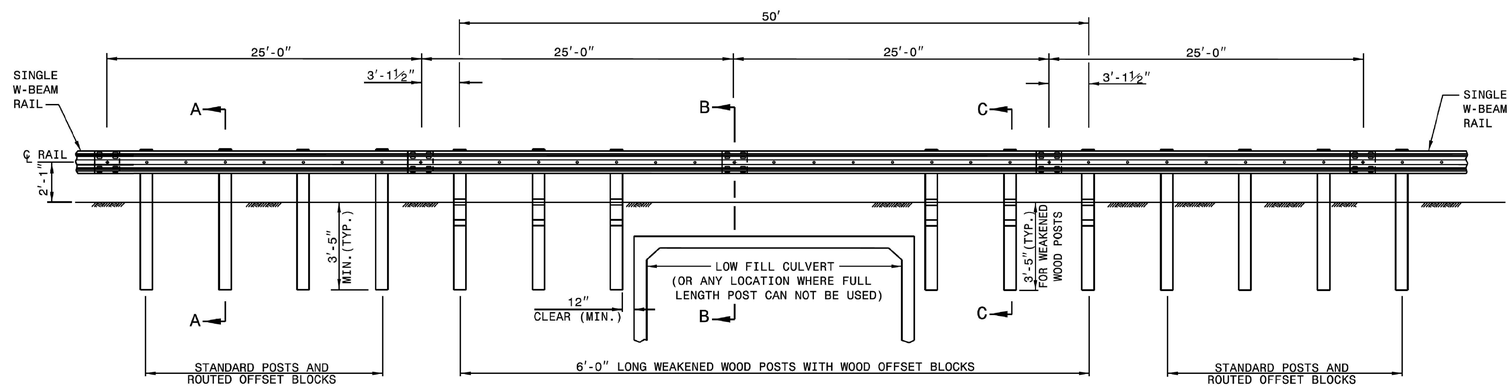


**ELEVATION**
**25'-0" GUARDRAIL SPAN**

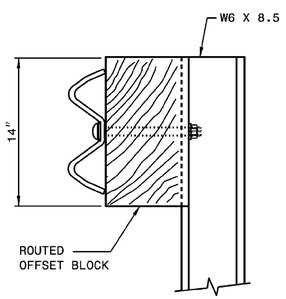


**SECTION A-A**

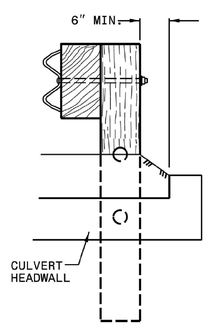


**SECTION B-B**

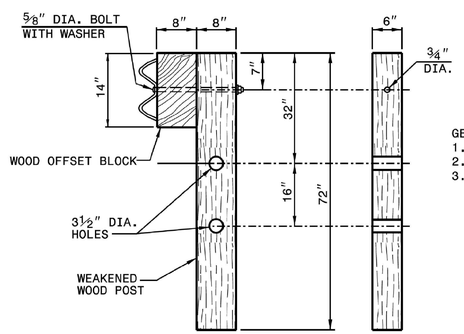


**SECTION C-C** **FRONT**
**WEAKENED WOOD POST**

GENERAL NOTES:
1. LAP RAIL IN THE DIRECTION OF TRAFFIC FLOW.
2. SEE ROADWAY PLANS FOR LOCATIONS AND CONTINUATION OF RAIL OR END SECTIONS.
3. MINIMUM DISTANCE OF 5 FEET BEHIND THE GUARDRAIL SHOULD BE CLEAR OF ANY FIXED-OBJECT HAZARDS THAT COULD SNAG AN IMPACTING VEHICLE.

SHEET - OF -
**862D01**

STATE OF NORTH CAROLINA
DEPT. OF TRANSPORTATION
DIVISION OF HIGHWAYS
RALEIGH, N.C.

SPECIAL DETAIL FOR
**GUARDRAIL PLACEMENT**
25'-0" CLEAR SPAN

SHEET - OF -
**862D01**

NORTH CAROLINA PROFESSIONAL SEAL 022966 ENGINEER TORY S. HOWERTON

**CONTRACTS STANDARDS AND DEVELOPMENT UNIT**
Office 919-707-6950 FAX 919-250-4119

**25'-0" CLEAR SPAN GUARDRAIL PLACEMENT**

ORIGINAL BY: _____ DATE: _____
MODIFIED BY: _____ DATE: _____
CHECKED BY: _____ DATE: _____
FILE SPEC.: _____

DOCUMENT NOT CONSIDERED FINAL UNLESS ALL SIGNATURES COMPLETED