DocuSign Envelope ID: 8C38AE10-E161-4DF5-B3E1-E4AF25368E7F

PROJECT REFERENCE NO.	SHEET NO.
B-6020	EC-2C
POLK COUNTY	CULVERT #740144

ONSITE CONCRETE WASHOUT STRUCTURE WITH LINER

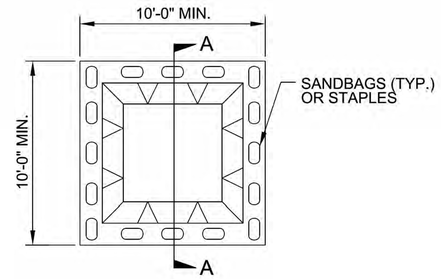

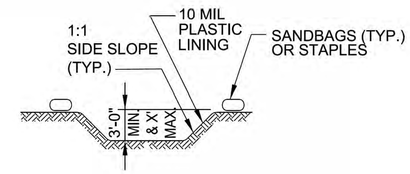

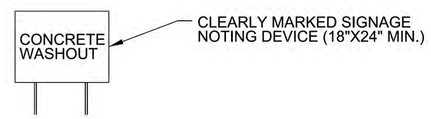

SECTION A-A

PLAN

NOTES:
1. ACTUAL LOCATION DETERMINED IN FIELD

2. THE CONCRETE WASHOUT STRUCTURES SHALL BE MAINTAINED WHEN THE LIQUID AND/OR SOLID REACHES 75% OF THE STRUCTURES CAPACITY.

3.CONCRETE WASHOUT STRUCTURE NEEDS TO BE CLEARY MARKED WITH SIGNAGE NOTING DEVICE.

BELOW GRADE WASHOUT STRUCTURE

NOT TO SCALE

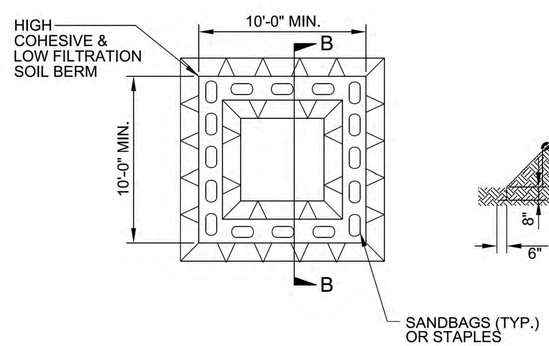

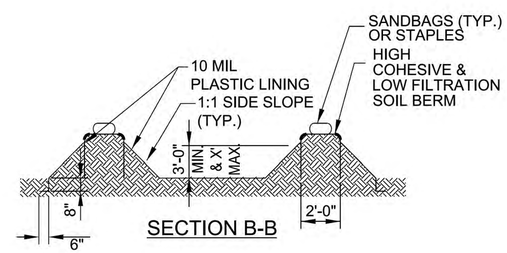

SECTION B-B

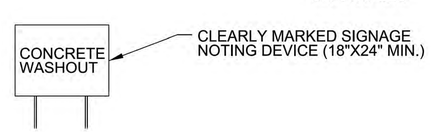

PLAN

NOTES:
1. ACTUAL LOCATION DETERMINED IN FIELD

2. THE CONCRETE WASHOUT STRUCTURES SHALL BE MAINTAINED WHEN THE LIQUID AND/OR SOLID REACHES 75% OF THE STRUCTURES CAPACITY TO PROVIDE ADEQUATE HOLDING CAPACITY WITH A MINIMUM 12 INCHES OF FREEBOARD.

3.CONCRETE WASHOUT STRUCTURE NEEDS TO BE CLEARY MARKED WITH SIGNAGE NOTING DEVICE.

ABOVE GRADE WASHOUT STRUCTURE

NOT TO SCALE

REVISIONS

8/17/19

3/18/2019
R:\Hydraulics\EC\B740125_EC_EC2C.dgn
8:23:51 PM